Ремонт холодильников http://rembitteh.ru/ +7 (495) 215-14-41 +7 (903) 722-17-03

SIEMENS

Gebrauchsanleitung
Instruction for Use
Mode d'emploi
Istruzioni per l'uso
Gebruiksaanwijzing
Brugsanvisning
Bruksanvisning
Bruksanvisning
Käyttöohje

de
en
fr
it
nl
da
no
sv
fi

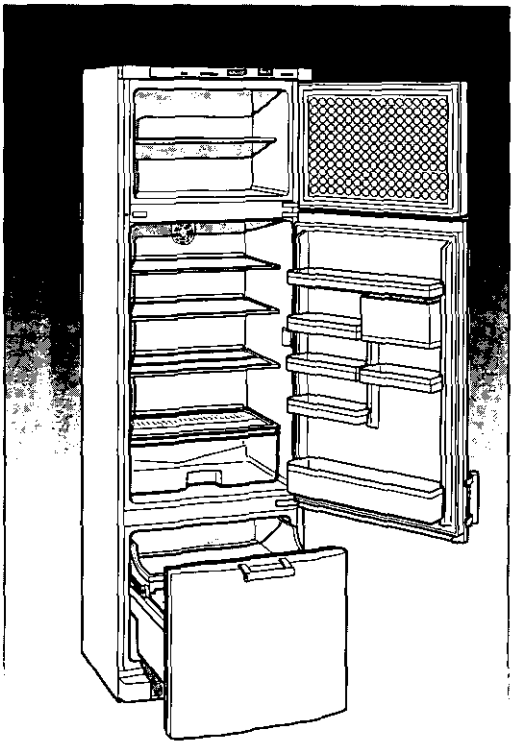

KS..F/KD..F

http://rembitteh.ru/

5 700 002 631 (8203)

Ремонт холодильников http://rembitteh.ru/ +7 (495) 215-14-41
+7 (903) 722-17-03

en Index

Instructions on appliance disposal 18
Safety information 18
Your new appliance 20
Fascia 20
Connecting the appliance 22
Switching on the appliance 23
Selecting the temperature 23
Switching off and disconnecting the appliance 23
Disconnecting the refrigerator and "cool-fresh" compartments 24
Interior fittings of refrigerator compartment 24
Freezer compartment 24
Freezing and storing frozen food 25
Freezing food 25
The "cool-fresh" compartment 26
Refrigerator compartment 27
Defrost the freezer compartment 27
Cleaning the appliance 28
Conserving energy 29
Operating noises 29
Eliminating minor faults yourself 30
Customer service 31

http://rembitteh.ru/

Ремонт холодильников http://rembitteh.ru/ +7 (495) 215-14-41 +7 (903) 722-17-03

Instructions on appliance disposal

Disposal of your old appliance

When replacing your old appliance with a new one, please comply with the following:

Old appliances are not worthless rubbish. Valuable raw materials can be reclaimed by recycling old appliances.

Render your old appliance unusable:

1. Pull out the mains plug,
2. Cut off the power cord and discard with mains plug,
3. **To prevent children from locking themselves in the refrigerator and suffocating, REMOVE THE LOCK.**

Professional disposal is required for refrigerants in refrigeration appliances and gases contained in the insulation. Ensure that *refrigeration tubing and coils are not* damaged or punctured prior to their proper disposal.

Disposal of packaging

Warning:

Keep children away from the shipping carton and packaging components. Danger of suffocation from folding cartons and plastic film.

You received your new appliance in a protective shipping carton. All packaging materials are environmentally friendly and recyclable. Please contribute to a better environment by disposing of packaging materials in an environmentally-friendly manner.

Please ask your dealer or inquire at your local authority about current means of disposal.

Safety information

Before switching on the appliance

Please read the operating and installation instructions carefully. They contain important information on how to install, use and maintain the appliance.

The manufacturer is not liable if you fail to comply with the instructions and warnings in the operating manual. Please retain these operating and installation instructions as they may be required by a subsequent appliance user.

Installing and connecting the appliance

Warning!

The appliance contains a small quantity of the environmentally-friendly but flammable *refrigerant R600a. Ensure that the re*frigeration tubing is not damaged during transportation and installation. Leaking refrigerant may cause eye injuries or ignite.

If refrigerant is leaking out:

- Avoid naked flames and ignition sources near the leakage.
- Unplug the appliance and ventilate the room for several minutes.

The more refrigerant in an appliance, the larger the room must be in which the appliance is situated. If a leak occurs in a

http://rembitteh.ru/

room which is too small, a flammable gas-air mixture may occur.

The room must be at least 1 m^3 per 8 g of refrigerant. The amount of refrigerant in your appliance is indicated on the rating plate inside the appliance.

In an emergency

- Wash eyes and call a doctor.
- Keep ignition sparks and naked flames away from the appliance.
- Pull out the mains plug and ventilate the room thoroughly for several minutes.

Using the appliance

- In the following cases remove the mains plug or switch OFF the fuse:

  – Defrosting

  – Cleaning

  Do NOT pull out the plug by tugging the mains cable.
- Repairs may only be performed by qualified customer-service technicians. Improper repairs may put the user in considerable danger.
- NEVER use electrical appliances inside the appliance (e.g. heater, ice-cream maker, etc).
- Do NOT stand or support yourself on the base, drawers or doors, etc.
- Bottles which contain a high percentage of alcohol must be sealed and placed vertically in the refrigerator.
- NEVER store products which contain flammable propellant gases (e.g. aerosols) or explosive substances in the appliance – **Explosion hazard!**
- Do NOT allow children to play with the appliance.
- If the appliance features a lock, keep the key out of the reach of children!
- NEVER use a steam cleaner to defrost or clean the appliance. Steam may come into contact with live components in the appliance and cause a short-circuit or an electric shock.
- Do NOT allow oil or fat to come into contact with the plastic components or door seal, otherwise the plastic parts and door seal could become porous.
- Bottled or canned drinks (especially carbonated beverages) must NEVER be stored in the freezer compartment. Bottles and tins will explode!
- Do NOT put ice lollies or ice cubes directly from the freezer compartment into your mouth.
  Risk of burns from very low temperatures.
- NEVER touch frozen food with wet hands. Your hands could freeze to the food!
- Do NOT scrape off hoarfrost or dislodge frozen food which is stuck to the freezer compartment with a knife or pointed implement.
  You could damage the refrigerant tubing.
  Leaking refrigerant may ignite or cause eye injuries.

General regulations

The appliance is suitable for

- chilling and freezing food
- making ice.

The appliance is designed specifically for use in the house.

Ремонт холодильников http://rembitteh.ru/ +7 (495) 215-14-41
+7 (903) 722-17-03

Your new appliance

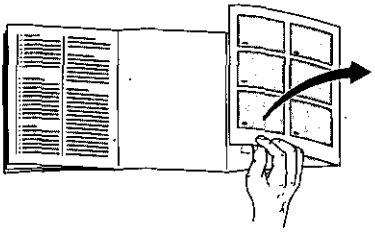

Certain details, in particular appliance features, may vary depending on the appliance model.

Fig. 1

A **Freezer compartment**
(–18 °C and colder)

B **"Cool-fresh" compartment**
(near 0 °C, but door shelves chilling area +3 °C to +5 °C)

C **Refrigerator compartment**
(+3 °C to +11 °C)

1–11 **Fascia**

12 **Circulating air fan**

13 **Shelves in refrigerator compartment**

14 **Interior light**

15 **Rear panel of the refrigerator compartment (refrigerating unit)**

16 **Humidity filter**

17 **Humidity container**

18 **Shelf for tubes and small tins**

19 **Butter and cheese compartment**

20 **Egg rack**

21 **Bottle storage compartment**

22 **Drawer**

23 **Cooling trolley**

Fascia

Fig. 2

1 **① On/Off button**

Main switch on appliance switches the whole appliance on and off.

2 **"🔕" button**

Switches off the warning signal. The warning signal is emitted if the freezer compartment is too warm, i.e. the frozen food is at risk of thawing. The warning signal may be emitted without any risk to the frozen food

– when the appliance is switched on

– if large quantities of fresh food are placed in the freezer compartment.

– and if the freezer-compartment door has been open for too long.

3 **"super" button for freezer compartment**

Switches "fast freeze" on and off.

"super" display **5** indicates that fast freeze is on. Fast freeze freezes large quantities of fresh food and, depending on the quantity, should be switched on up to **24 hours before the fresh food is placed** in the freezer compartment.

After being switched on, the refrigerating unit runs constantly and the freezer compartment drops to a very low temperature.

***Fast freeze switches off* automatically when the fresh food has frozen solid (after several hours for small quantities of food, after no more than two days for large quantities of food).**

If you forgot to put the food in the *freezer compartment, fast freeze*

http://rembitteh.ru/

switches off after approx. 26 hours.

4 **"◇" Button for selecting temperature in freezer compartment**

Press ◇ button **4**.
The preset temperature is displayed for 5 seconds in display **7**.

Press the selection button repeatedly or continuously until the desired temperature is displayed. The value last selected is stored. (The temperature selection is displayed consecutively from −18 °C to −24 °C. −18 °C is redisplayed after −24 °C).

5 **"super" display (freeze)**

Illuminates only when fast freeze is on.

6 **The "alarm" display**

illuminates and the warning tone sounds simultaneously, when it becomes too warm in the freezer compartment.

This **extinguishes** when the freezer compartment has reached its operation temperature.

7 **Temperature display for freezer compartment**
(displays **2** different temperatures)

a) Current temperature in freezer compartment

The current temperature in the freezer compartment is displayed here, without any buttons having been pressed.

b) Temperature selection for freezer compartment

When selection button **4** is pressed, the temperature selection is displayed for five sec. Then the "current temperature in the freezer compartment" is redisplayed.

8 **"cold + fresh" display (cool)**

Illuminates when the main switch **11** for the refrigerator compartment has been switched on.

9 **Display for refrigerator compartment**

Illuminates only when the main switch **11** for the refrigerator compartment has been switched on and displays two functions:

a) Current temperature in refrigerator compartment

No need to press a button – the current temperature in the refrigerator compartment is displayed here.

b) Setting the temperature in the refrigerator compartment

When selection button **10** is pressed, the temperature selection is displayed for five sec.

Then the "current temperature in the refrigerator compartment" is redisplayed.

10 **Button for selecting temperature in refrigerator compartment**
(The temperature in the refrigerator compartment can be selected from +2 °C to +11 °C.)

Press "◇"-button.

The preset temperature is displayed for 5 seconds in display **9**.

Press the selection button repeatedly or continuously until the desired temperature is displayed.
(The temperature selection is displayed consecutively from +11 °C to +2 °C. +11 °C is redisplayed after +2 °C.)

Ремонт холодильников http://rembitteh.ru/ +7 (495) 215-14-41 +7 (903) 722-17-03

11 Ⓥ **-button** (not all models)

Used for switching on/off the refrigerator compartment. (The refrigerator compartment will not function until the main switch **1** has been switched on.)

Climatic classes – permitted ambient temperature

The climatic class can be found on the rating plate and specifies the ambient temperatures at which the appliance may be operated.

Climatic class	Permitted ambient temperature
SN	+10 °C to 32 °C
N	+16 °C to 32 °C
ST	+18 °C to 38 °C
T	+18 °C to 43 °C

Ventilation

Fig. 3

The air at the back of the appliance will heat up. This warm air must be allowed to freely escape, otherwise the refrigerating machine must perform more. This raises electricity consumption. Hence, the air-inlet and outlet apertures should never be covered or blocked off!

Connecting the appliance

After installing the appliance, you should wait at least ½ hour before switching on the appliance. While the appliance is being transported, the oil in the compressor may leak into the refrigeration system.

Clean the interior of the appliance before using for the first time (see "Cleaning").

The mains socket should be easily accessible. Connect the appliance to a 220–240 V/50 Hz AC mains supply at a correctly installed socket. The socket must be equipped with a fuse protection rated 10 A or higher.

If the appliance is to be operated in a non-European country, check that the voltage and current type indicated on the rating plate correspond with the specifications of your power supply. The rating plate is situated in the bottom left-hand side of the appliance. The mains connection cable may be replaced by an electrician only.

⚠ ***Warning!***

The appliance may not, under any circumstances, be connected to electronic energy-saving plugs (e.g. Ecoboy; Sava Plug) and to power inverters which convert direct current to 230 V alternating current (e.g. solar energy systems, power networks on ships).

http://rembitteh.ru/

Switching on the appliance

Fig. 2

When the buttons are pressed, an acknowledgement signal is emitted.

- **Press main switch 1 on appliance,** warning signal is emitted, "alarm" display **6**, "current temperature in refrigerator compartment" display **9** and "current temperature in freezer compartment" display **7** illuminate.
- **Press button 2,** – warning signal stops.
  The appliance is now operating.

The appliance left the factory with the following standard settings:

Temperature in refrigerator compartment	+6 °C
Temperature in freezer compartment	–18 °C

Selecting the temperature

The set values can be changed; see description of the fascia:

4 Setting the temperature in the freezer compartment

10 Setting the temperature in the refrigerator compartment

The temperature in the fresh refrigerator zone Fig. 1/B has been set to about 0 °C at the factory and, if possible, should not be changed. If frost should start to build up on the refrigerated food then the temperature can be set to warmer. (See "Minor malfunctions you can easily remedy yourself".)

Operating tips

- When the freezer compartment has reached its operating temperature, the "alarm" display **2/6** extinguishes.
- The end sides of the housing are sometimes moderately heated. This prevents condensation from forming around the door seal.
- While the refrigerating unit is running, beads of water or hoarfrost form at the back of the refrigerator compartment. This is quite normal. It is not necessary to scrape off the layer of hoarfrost or wipe off the beads of water. The rear panel defrosts automatically. The condensation collects in the drainage channel **Fig. 10**, and is conveyed to the refrigerating unit where it evaporates.
- If you cannot open the freezer compartment door immediately after closing it, wait 2–3 minutes until the partial vacuum has equalised.

Switching off and disconnecting the appliance

Switching off the appliance

- Press the main switch **Fig. 2/1**. Refrigerating unit and interior light switch off.

Ремонт холодильников http://rembitteh.ru/ +7 (495) 215-14-41
+7 (903) 722-17-03

Disconnecting the appliance

If the appliance is not to be used for a prolonged period:

- Pull out the mains plug.
- Defrost and clean the appliance.
- Leave the appliance doors open.

Disconnecting the refrigerator and "cool-fresh" compartments

If only the freezer compartment is to be left on, e.g. when going away on holiday, press the button for the refrigerator and "cool-fresh" compartments **Fig. 2/11** until the displays **Fig. 2/8** and **Fig. 2/9** go out, clean the refrigerator and "cool-fresh" compartments.

Leave the appliance doors closed.

The refrigerator and "cool-fresh" compartments are lightly cooled, preventing the formation of odours.

Interior fittings of refrigerator compartment

The interior can be re-arranged:

Fig. 4

- Pull the shelves forwards, lower and pull out.
  Reposition supports A, B and stopper C.

Fig. 5

- Lift up the container on the door and remove or reposition.

Special features

(* not on all models)

"Vario" shelf

Fig. 6

The front half of the "Vario" shelf can be pushed back. Tall items can then be placed on the shelf below (e.g. cans, bottles).

Bottle holder

Fig. 7, 8

The bottle holder prevents bottles from falling over when the door is opened and closed.

Bottle partition

Fig. 13/A

It is recommended to place large bottles, e.g. wine and juice bottles, in front of the partition and small bottles, e.g. beer bottles, behind the partition.

Important: For reasons of safety and stability do not remove the partition.

Freezer compartment

Use the freezer compartment

- For storing frozen food
- Making ice cubes
- For freezing food

http://rembitteh.ru/

Ensure that the freezer-compartment door is always closed! If the door is open, the frozen food will thaw. The freezer compartment will become covered in a thick layer of ice. Also: energy will be wasted due to high power consumption!

Freezing and storing frozen food

Buying frozen food

The packaging must not be damaged.

Note the sell-by date.

The temperature in the supermarket freezer should be –18 °C or lower.

Transport the frozen food in an insulating bag, where possible and put it quickly into the freezer compartment.

Freezing food

Freeze only fresh and undamaged food. Pack food in air-tight containers to retain the flavour and prevent the food from drying out.

Wrap the food correctly:

1. Place the food in the wrapping.
2. Squeeze out all air.
3. Seal the wrapping well.
4. Label the wrapping with the contents and date of freezing.

Unsuitable for packing are:

wrapping paper, greaseproof paper, cellophane, refuse bags and used shopping bags.

Suitable for packing are:

Plastic film, polyethyelene blown film, aluminium foil, freezer tins, etc.
Bags and polyethylene blown film can be selaed with a film sealer.

The following products are suitable for sealing the wrapped food:

Rubber bands, plastic clips, string, cold-resistant adhesive tape.

⚠ Warning

Do NOT wrap food or seal containers with materials which are a health hazard.

Freezer capacity

(Applies only to 4-star appliances)
You can freeze the following quantities of food at the bottom of the freezer compartment within 24 hours (preferably on the right side):

KSF/KS..F	5 kg
KDF/KD..F	6 kg

Storage duration

To retain the quality of the frozen food, do not exceed the permitted storage duration at –18 °C.

Fish, cold meats, ready meals, cakes and pastries	Up to 6 months
Cheese, poultry, meat	Up to 8 months
Vegetables, fruit	Up to 12 months

Ремонт холодильников http://rembitteh.ru/ +7 (495) 215-14-41
+7 (903) 722-17-03

Making ice cream

Warning

Do NOT use an electric ice-cream maker in the freezer compartment.

Making ice cubes

Fig. 9

(not all models)

Fill the ice cube tray ¾ full of water and place in the freezer compartment.

To loosen the ice cubes, hold the tray briefly under running water or twist the tray slightly.

The "cool-fresh" compartment

The temperature in the "cool-fresh" compartment is kept constant at almost 0 °C. The low temperature and high air humidity (in the high-humidity drawer) provides optimum storage conditions for fresh food.
Everything in the "cool-fresh" compartment can be kept fresh for twice as long as usual.

The high-humidity drawer

The high-humidity drawer **Fig. 1**/17 is covered by a special filter which allows air, but not humidity, to escape. As a result, there can be up to 90 % atmospheric humidity in the high-humidity drawer depending on the stored food. These are ideal conditions for storing garden produce such as. salad vegetables, vegetables, fruit, mushrooms and herbs.

The following foods are suitable for storing in the "cool-fresh" compartment:

On the shelves: Fig. 1/13
Ready meals, meat, poultry, cheese, seafood, dairy products (opened or those which are to be kept fresh for longer), *ham, sausage.*

The following foods are not suitable for storing in the "cool-fresh" compartment:

Fruit and vegetables which are sensitive to the cold such as: tropical fruits, avocados, papayas, passion fruit, aubergines, *cucumbers, peppers, fruit which has not* yet ripened, green tomatoes, potatoes and hard cheese. These foods are best stored in the refrigerator compartment **Fig. 1**/C.

When purchasing food:

The storage life of food depends on its degree of freshness at the time of purchase. Generally, the fresher the produce when placed in the "cool-fresh" compartment, the longer it will stay fresh. *Therefore, when purchasing food, always* check how fresh it is.

http://rembitteh.ru/

Ремонт холодильников http://rembitteh.ru/ +7 (495) 215-14-44 +7 (903) 722-17-03

Storage times (at 0 °C)

depending on initial quality	
Sausage, sliced cold meat, meat, giblets, fish, fresh milk, curd cheese	up to 7 days
Small pieces of meat, mushrooms, salad vegetables, leaf vegetables	up to 10 days
Large pieces of meat, ready meals	up to 15 days
Smoked or pickled sausage, cabbage	up to 20 days
Large pieces of heat-treated meat, beef, game, pulses	up to 30 days

Refrigerator compartment

Adjustable from +3 °C to +11 °C. We recommend a temperature of +6 °C.

Use the refrigerator compartment

In the drawer:
For storing cakes and pastries, ready meals, preserved foods, condensed milk, hard cheese, fruit and vegetables sensitive to the cold: tropical fruits such as mandarins, bananas, pineapples, melons, avocados, papayas, passion fruit, aubergines, fruit which has not yet ripened, tomatoes, cucumbers, green tomatoes and potatoes.

In the cooling trolley:
Beverages cooled to drinking temperature.

Warning: Do not store resealed bottles of sparkling wine in the cooling trolley. Vibrations created when the cooling trolley is opened may cause the corks to shoot out of the bottles.

Defrost the freezer compartment

Defrost freezer compartment once or twice a year. Then clean the appliance.

⚠ Risk of electric shock
NEVER use a steam cleaner. If live components come into contact with condensing steam, they may short-circuit or cause an electric shock.

Do NOT remove hoarfrost with a knife or pointed implement.

Do NOT damage the refrigeration tubing. Leaking refrigerant may cause eye injuries and is flammable.

Do NOT place any electric appliances or naked flames in the appliance.

Proceed as follows

1. **Remove the frozen food and place in a cold location.**
2. **Pull out the mains plug or disconnect the fuse.**
3. **Defrost the appliance.**
4. **Wipe freezer compartment dry.**
5. **Switching on the appliance again.**
6. **Put the frozen food back into the freezer compartment.**

Defrosting aid
Place a pan of hot water on a base in the freezer compartment.

http://rembitteh.ru/

Ремонт холодильников http://rembitteh.ru/ +7 (495) 215-14-41 +7 (903) 722-17-03

Defrosting sprays

Follow the manufacturer's instructions.

⚠ *Warning*

Defrosting sprays may form explosive gases and/or contain solvents or propellants which corrode plastic and/or may be a health hazard.

Refrigerator and "cool-fresh" compartments defrost fully automatically

While the refrigerating unit is running, condensation or hoarfrost forms on the rear panel of the refrigerator compartment. This is quite normal. It is not necessary to wipe off the condensation or hoar frost. The rear panel defrosts automatically. The condensation runs into the drainage channel **Fig. 10** and then to the refrigerating unit where it evaporates.

Note: Clean the condensation channel and drain hole **Fig. 10** to prevent the condensation flow from becoming obstructed.

Cleaning the appliance

Clean the refrigerator and freezer compartments monthly. It is advisable to clean the freezer compartment whenever it is defrosted.

1. **Warning: Pull out the mains plug or disconnect the fuse!**
2. **Clean with water and a little detergent.**
3. **Clean the door seal with water only and then dry thoroughly.**
4. **Remove the "cool-fresh" drawer and refrigerator drawer Fig. 12 and Fig. 11.**
5. **Remove the cooling trolley Fig. 13.**
6. **After removing the humidity drawer, remove the humidity filter Fig. 14. Take the filter cover Fig. 15 off the humidity filter, remove the filter, clean in lukewarm water and leave to dry.**
7. **Dry the appliance thoroughly, insert the mains plug or connect the fuse.**

Water used for cleaning must not drip onto the fascia or light, or run through the drain hole into the evaporation pan.

Do NOT use abrasive or acidic cleaning agents or solvents.

The shelves and containers are not dishwasher-proof and may become deformed if cleaned in the dishwasher.

Important care information for stainless steel appliances

Clean stainless steel surfaces with "Chromol".

The cleaning agent is available on the market under the name "Chromol" or from your customer service under the

Ident. no. 310359 as a 500 ml spray can and

Ident. no. 166787 as a 50 ml trial can.

To prevent damage to the surfaces, under no circumstances use abrasive sponges, metal brushes, sharp-edged implements or scouring agents. Chemically aggressive

http://rembitteh.ru/

cleaning agents, such as defrosting sprays, oven sprays, solvents or stain removers must not be used either.

Conserving energy

- The appliance should be installed in a dry, well ventilated room, but not exposed to direct sunlight and not placed near a heat source (e.g. a radiator, cooker). If installation next to a heat source is unavoidable, use a suitable insulating plate.
- Allow warm food and drinks to cool outside the appliance.
- To thaw frozen food, place it in the refrigerator. You can thus use the thawing process to cool other food.
- Open the appliance door as briefly as possible.

Operating noises

Completely normal noises

Humming noise – refrigerating unit is running.

Bubbling, whirring or **gurgling noises** – refrigerant is flowing through the refrigeration tubing.

Clicking noise – motor is switching on or off.

Noises which can easily be eliminated

The appliance is not standing level

Please use a spirit-level to ensure that the appliance is standing level. Adjust the threaded feet or place something underneath to bring the appliance level.

The appliance is crowded

Please leave clearance between the appliance and surrounding furniture or appliances.

Drawers, baskets or storage surfaces are unsteady or stick.

Please check that the removable parts are correctly in position and reinsert if necessary.

The containers are touching

Place the bottles or containers a little apart.

Ремонт холодильников http://rembitteh.ru/ +7 (495) 215-14-41 +7 (903) 722-17-03

Eliminating minor faults yourself

Before you call customer service:
Check whether you can rectify the fault yourself according to the following information.

You must pay for customer service advice – even during the warranty period!

Fault	Possible cause	Remedial action
None of the displays illuminate.	Power failure; fuse has tripped; mains plug not inserted properly.	Check that the power is on; fuse must be reset.
The display shows "E..".	The electronics are defective.	Call Customer service
"alarm" display illuminates, the acoustic warning signal sounds.	Malfunction – it is too warm in the freezer compartment! • Ventilation openings are blocked. • Freezer compartment door is open. • Too much food was placed at once in the freezer compartment.	Press the " " button to cancel the warning tone. Ensure that there is adequate ventilation. Close the door. Do not exceed the max. freezing capacity.
The interior light does not function; the refrigerating unit is running.	The bulb is defective.	**For appliances with halogen bulb:** 1. Pull out the mains plug or disconnect the fuse. Remove the bulb housing **Fig. 16**. 2. Remove the cover and pull out the defective bulb **Fig. 17**. Insert bulb into bulb holder with a clean cloth or piece of paper. 3. Re-attach cover. Re-install bulb housing.
Floor of the refrigerator compartment is wet.	The condensation outlet pipe is blocked **Fig. 10**.	Clean the condensation channel and outlet **Fig. 10**, see Cleaning the appliance.

http://rembitteh.ru/

Fault	Possible cause	Remedial action
The temperature in the "cool-fresh" compartment is too low or too high.	The fixed setting has been set too high or too low (e.g. if there is frost in the "cool-fresh" compartment).	The temperature in the "cool-fresh" compartment can be corrected. First, switch off the main switch **Fig. 2/1**. Then, simultaenously press buttons **Fig. 2/10** and **Fig. 2/1** for 1–2 sec. (first, button Fig. 2/10) until "02" is displayed. To select the temperature values, press the button **Fig. 2/10** until the desired temperature value is displayed (consecutive sequence 1–4). The selected temperature value is stored. After 1 min. the display switches back to the current temperature in the refrigerator compartment.

Customer service

Please check your telephone book or the customer-service list for your nearest customer-service facility. When contacting customer service, please ALWAYS quote the product number (E-number) and production number (FD-number) of your appliance.

These numbers can be found on the rating plate. **Fig. 18**

To prevent unncessary call-outs, please assist customer service by quoting the product and production numbers. This will save you additional costs.

Ремонт холодильников http://rembitteh.ru/ +7 (495) 215-14-41 +7 (903) 722-17-03

1-11
A
12
13
14
B
15
16
17
22
C
23
18
19
20
21

1

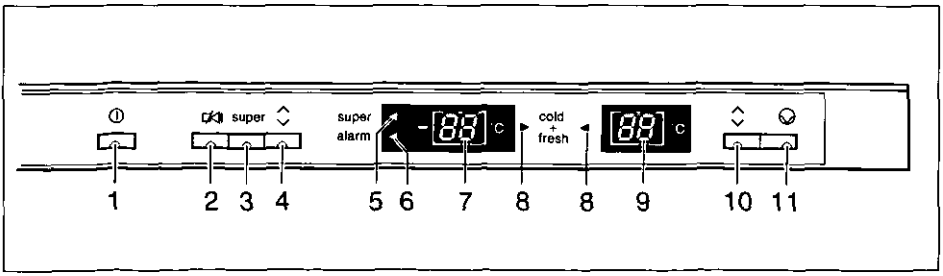

2

http://rembitteh.ru/

Ремонт холодильников http://rembitteh.ru/ +7 (495) 215-14-41 +7 (903) 722-17-03

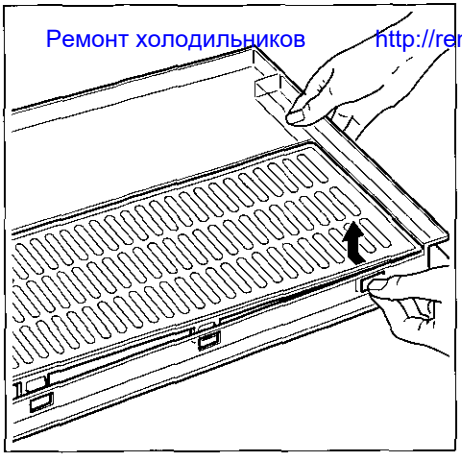

15

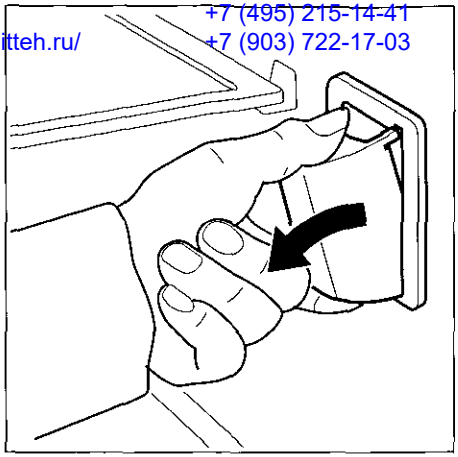

16

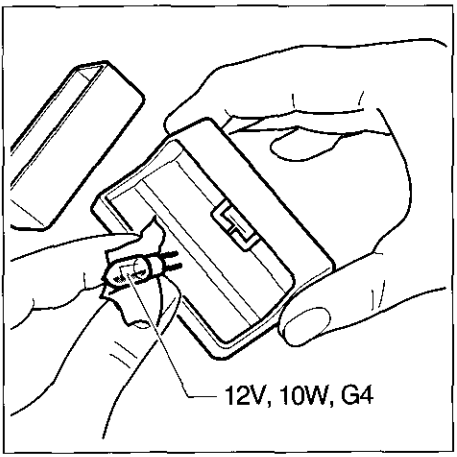

17

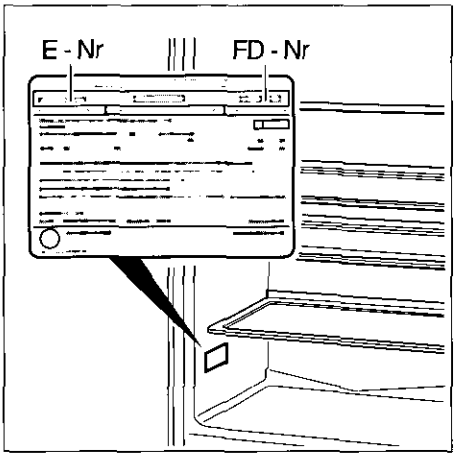

18

http://rembitteh.ru/

Ремонт холодильников http://rembitteh.ru/ +7 (495) 215-14-41 +7 (903) 722-17-03

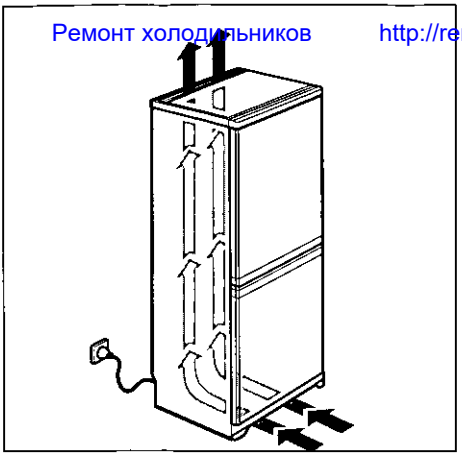

3

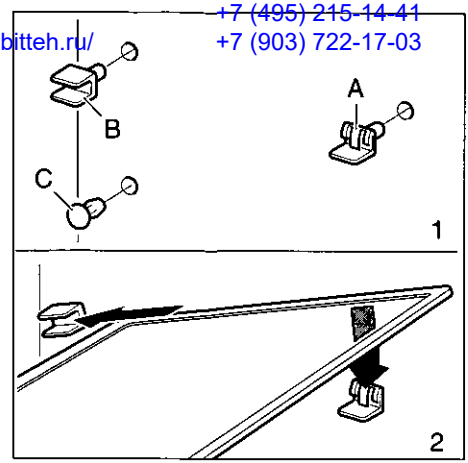

4

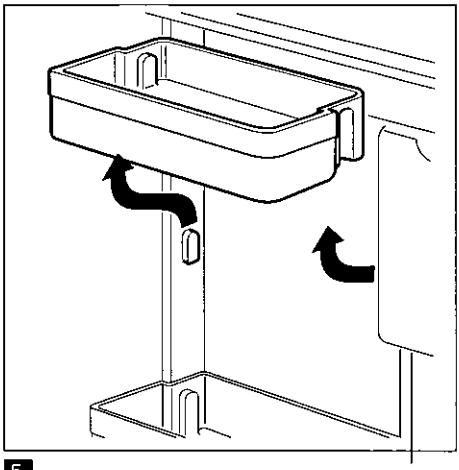

5

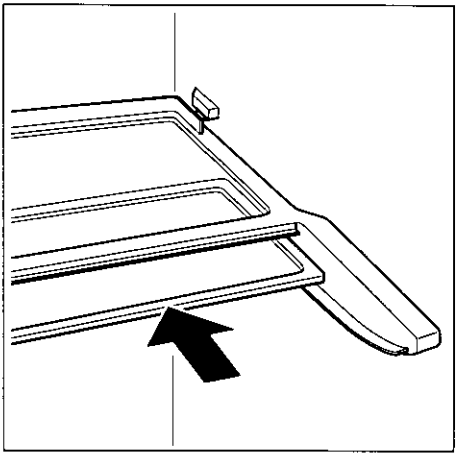

6

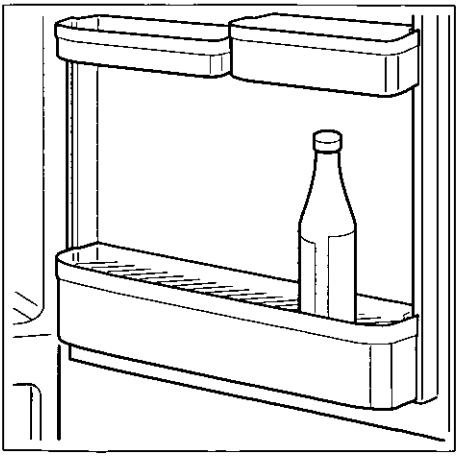

7

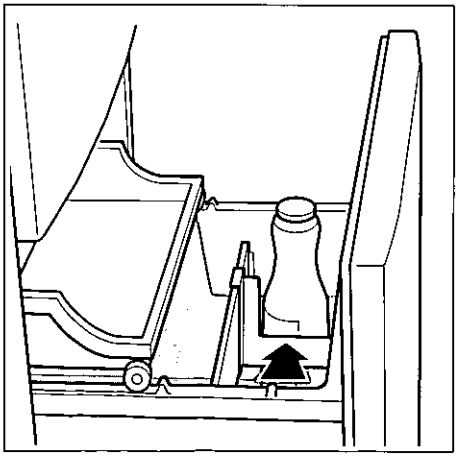

8

http://rembitteh.ru/

Ремонт холодильников http://rembitteh.ru/ +7 (495) 215-14-41 +7 (903) 722-12-03

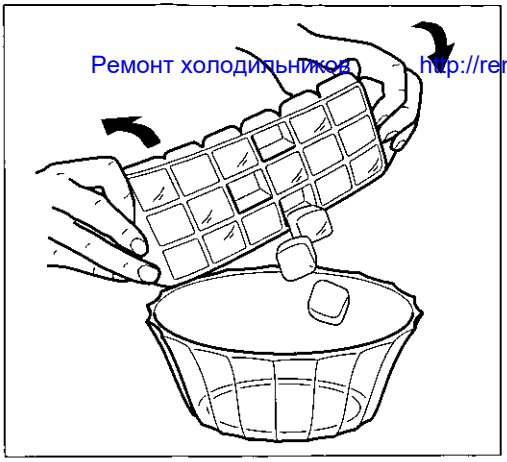

9

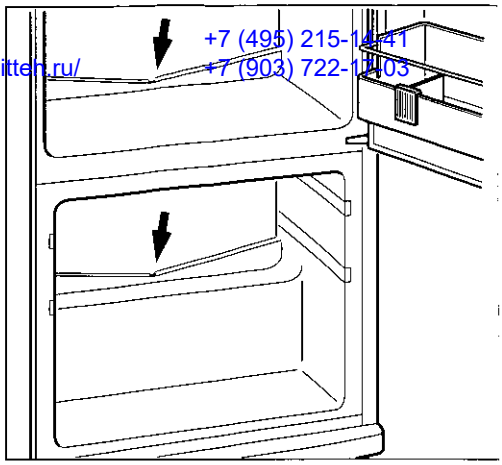

10

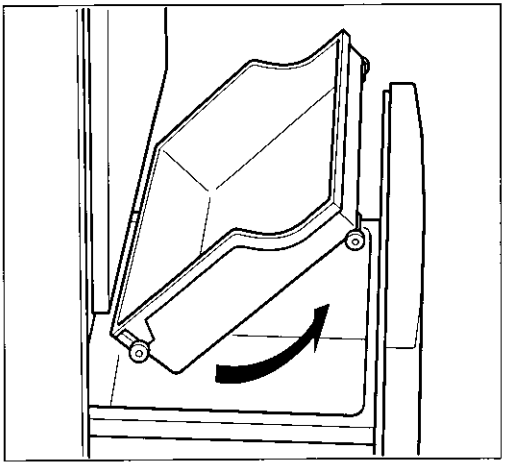

11

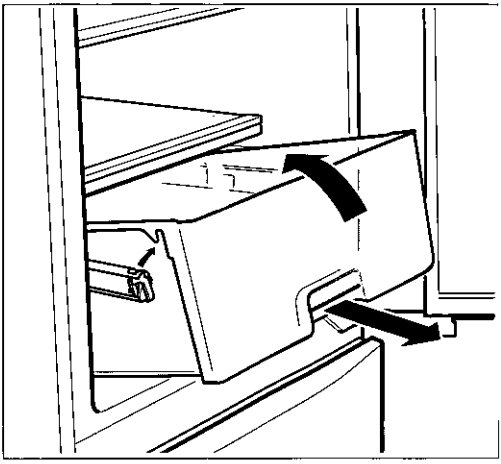

12

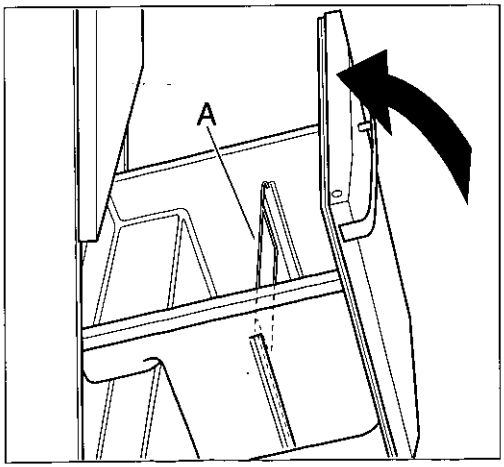

13

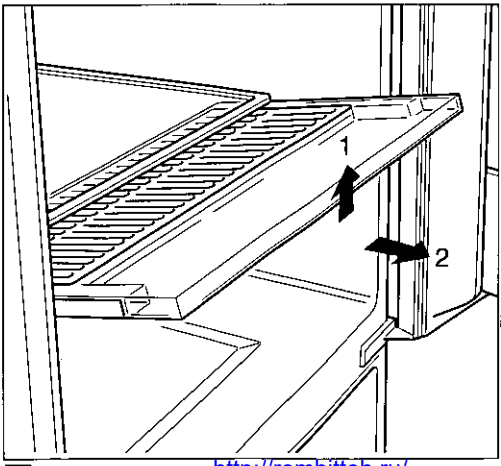

14

http://rembitteh.ru/

Ремонт холодильников http://rembitteh.ru/ +7 (495) 215-14-41
+7 (903) 722-17-03

Family Line
01805-2223

(€ 0,12/Min. DTAG)
Siemens-Hausgeräte

Besuchen Sie uns im Internet:
http://www.siemens.de/hausgeraete

KD32F490/0

U583522

Änderungen vorbehalten
Subject to modification
Tous droits de modification réservés
Con riserva di modifiche
Wijzigingen voorbehouden
Der tages forbehold for opgivne mål og tekniske oplysninger
Endringer forbeholdes
Rätt till ändringar förbehålles
Oikeus muutoksiin pidätetään

SIEMENS ELECTROGERÄTE GMBH

5 700 002 631 (8203)
de, en, fr, it, nl, da, no, sv, fi

http://rembitteh.ru/